Parts List

Item No.	Part No.	Description	Q'ty
1	32206140766	Hex.Soc.Hd.Bolt	1
2	20790000001	Bushing,Deflector	1
3	30106250866	Hex.Soc.Hd.Bolt	4
4	20790010115	Deflector,Exhaust	1
5	20750220001	Guide Cover	2
6	207900202XX	Cap	1
7	20750130015	Gasket,Cap	1
8	20750140217	Piston Stopper	1
9	20970160100	Spring	1
10	30700110000	O-Ring	1
11	30700111000	O-Ring	1
12	20750150000	Piston,Head Valve	1
13	20750250117	Seal	1
14	30700112000	O-Ring	1
15	20790180116	Cylinder Seal	1
16	20750370000	Cylinder Spacer	1
17	30700113000	O-Ring	1
18	30700121000	O-Ring	1
19A	21590462001	Driver Assembly-Regular	1set
20	30700075000	O-Ring	1
21	20790350000	Cylinder	1
22	20750470115	Bumper	1
23A	207506023XX	Body Assembly	1set
24	30700185000	O-Ring	1
25	207707X01XX	End Cap	1
26	30700079000	O-Ring	1
27	30700081000	O-Ring	1
28	20750900074	Valve	1
29	30700071000	O-Ring	2
30	30700024000	O-Ring	1
31	30700002000	O-Ring	1
32	20750910074	Valve Plunger	1
33	20770960001	Spring	1
34	30700080000	O-Ring	2
35	20770920000	Plunger	1
36	20770930016	Plunger Cap	1
37A	20750952115	Trigger Assembly-Bump	1set
38	30803240001	Spring Pin	2
39	30700078000	Grommet	2
40	20770890001	Pin Trigger	2
41	20972840315	Guide, Contact Trip	1
42	20771490001	Spring, Safety	1
43	20971480001	Upper Safety Lever	1
44	31303000001	E-ring	1
45	21191600066	Adjusting Nut	1
46	31200200000	Ball,Steel	2
47	20771630000	Adjusting Spring	1
48	21191500101	Adjusting Post	1
49	20011070000	Gasket	1
50	21591130066	Nose	1
51A	20973502100	Magnet Bushing Assembly	1set
52	20971540001	Guide,Safety Lever	1
53	30106220766	Hex.Soc.Hd.Bolt	5
54	21501550015	Safety Cover	1
55	20011760001	Bushing	2

Item No.	Part No.	Description	Q'ty
56	21392340001	Pin	2
57A	21391521100	Safety Nose Assembly	1set
58	20971120001	Spring	1
59	20971180166	Feed Pawl	1
60	30700157000	O-Ring	6
61	20971170001	Roll Pin	2
62	20971140001	Feed Piston	1
63	30700072000	O-Ring	1
64	21191190112	Feed Spring	1
65	20971090017	Feed Piston Bumper	1
66	20971160101	Feed Piston Cover	1
67	32522000001	C-ring	1
68	20971270001	Shaft Pin Nail Guide	2
69	20971300001	Spring	1
70	20971200001	Nail Stopper	1
71	20971250166	Nail Guide	1
72	30803120001	Spring Pin	1
73	20971220001	Spring,Lock Shaft	1
74	20971230266	Lock Shaft	1
75	20971790015	Magazine Cover	1
76	20011770015	Tension Post Bushing(Upper)	1
77	20011820101	Spring	1
78	20971890015	Nail Holder	1
79	20011810015	Adjust Post	1
80	20971840015	Magazine	1
81	20971850001	Magazine Guide	1
82	32704080166	Screw	3
83	20011830015	Tension Post Bushing	1
84	20971870001	Adjusting Nut	1
85	30606100001	Locknut	2
86	20971860001	Gauge Bracket	1
87	30106300166	Hex.Soc.Hd.Bolt	2
88	20971880001	Adjusting Plate	1
89	30106120866	Hex.Soc.Hd.Bolt	1
90	30900003001	Flat Washer	2
91	32806100001	Locknut	1
92A	21501510000	Lower Safety Lever Assembly	1set
93	33304050166	Hex.Soc.Hd.Bolt	1
94	21393600066	Jaw A	1
95	21393610066	Jaw B	1
96	21393620001	Spring	1
97	30700136000	O-Ring	1
		Optional Parts	
98A	20970832115	Belt hook Assembly	1set
98A-1	209707X00XX	End Cap	1
98A-2	20970830115	Belt hook	1
98A-3	30700188000	O-Ring	1
98A-4	20970840001	Cover,Belt hook	1
98A-5	33425000001	C-Ring	1
99A	20770952259	Trigger Assembly-SEQ.	1
100A	21590572001	Driver Assembly-Shorter	1

ANC45R#41591100100

11/5/2009
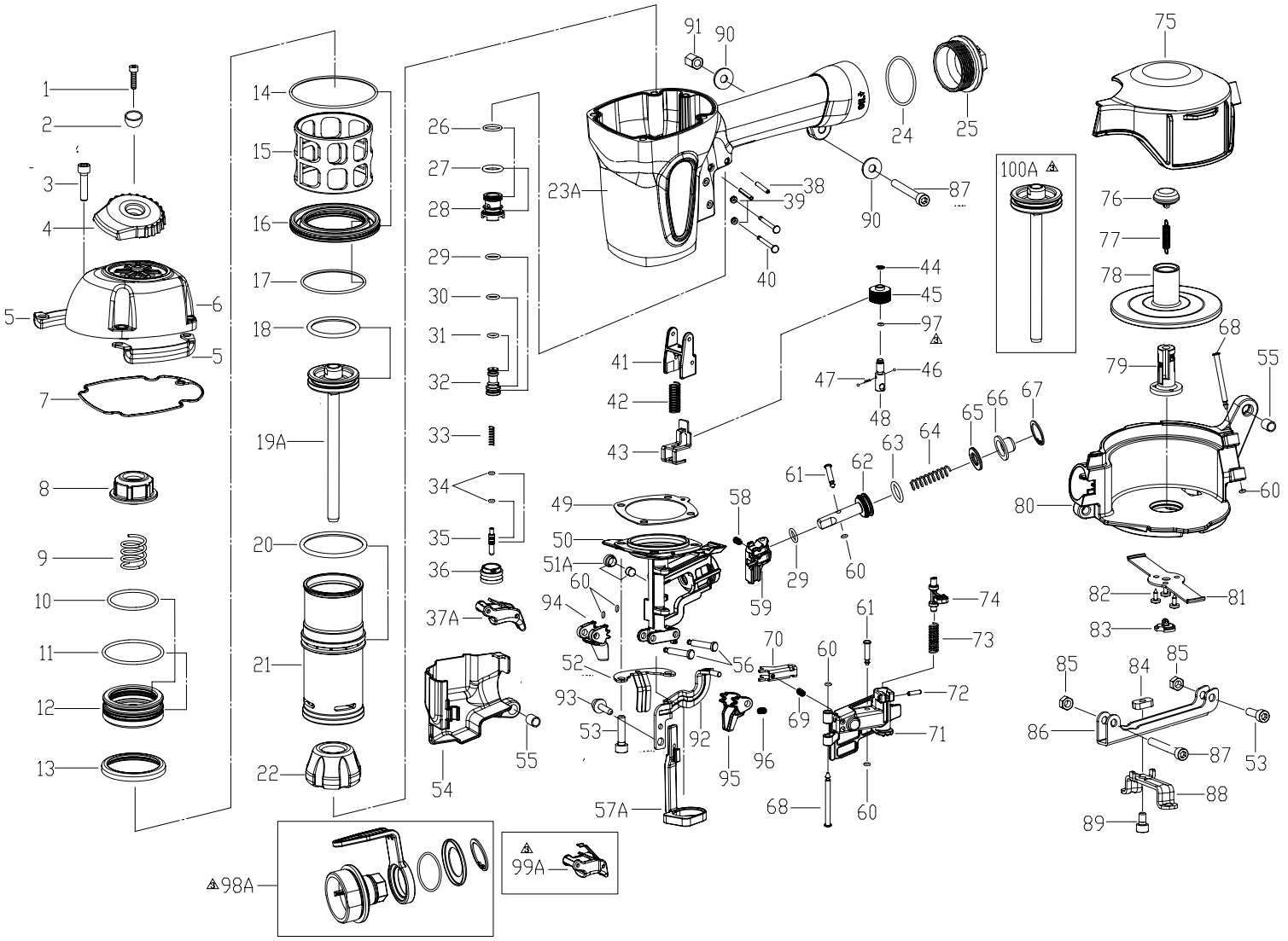
EXPLODED VIEW